COVERNIT

MONTAGEHANDLEIDING

# RADIATORFOLIE HEATREFLECT



1X

10 min

NL

# RADIATORFOLIE HEATREFLECT

6 x 

1 x 

1.

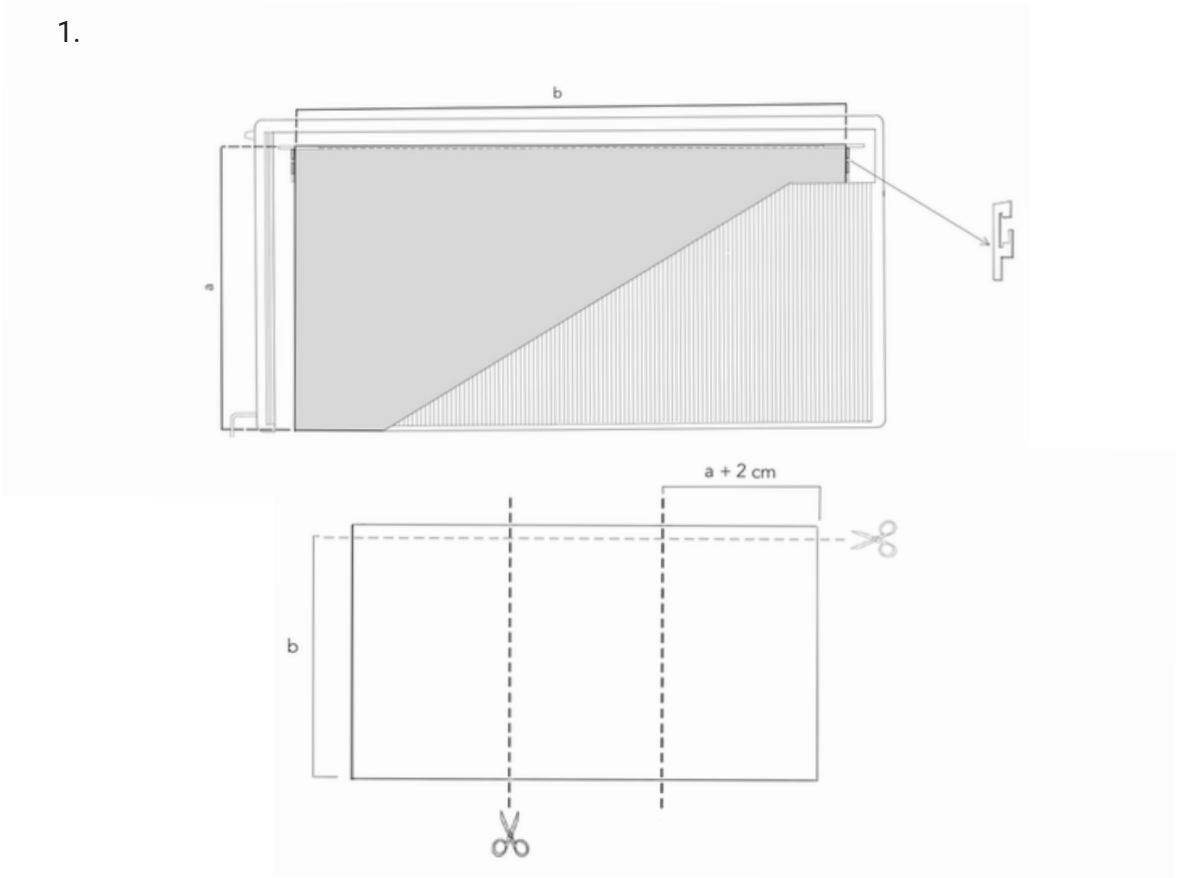


2.

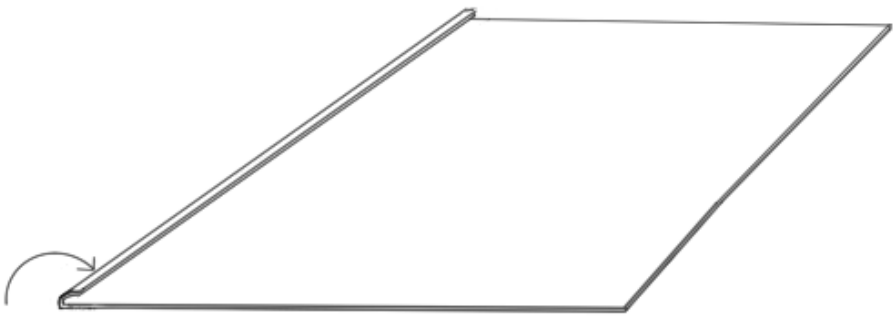

3.

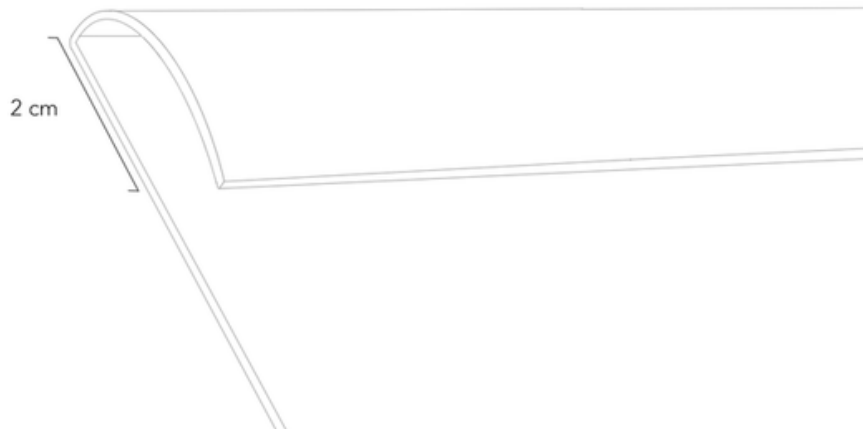


4.

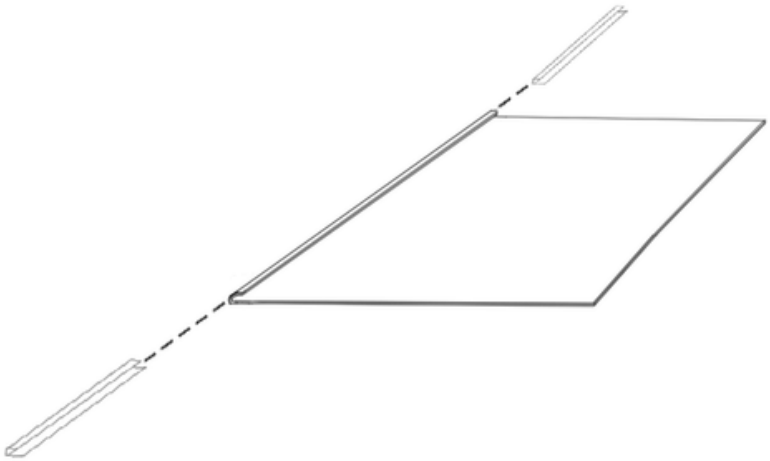

5.

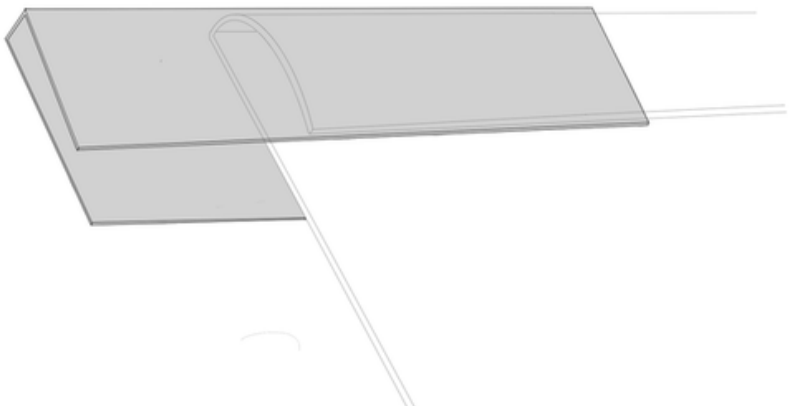

6.

